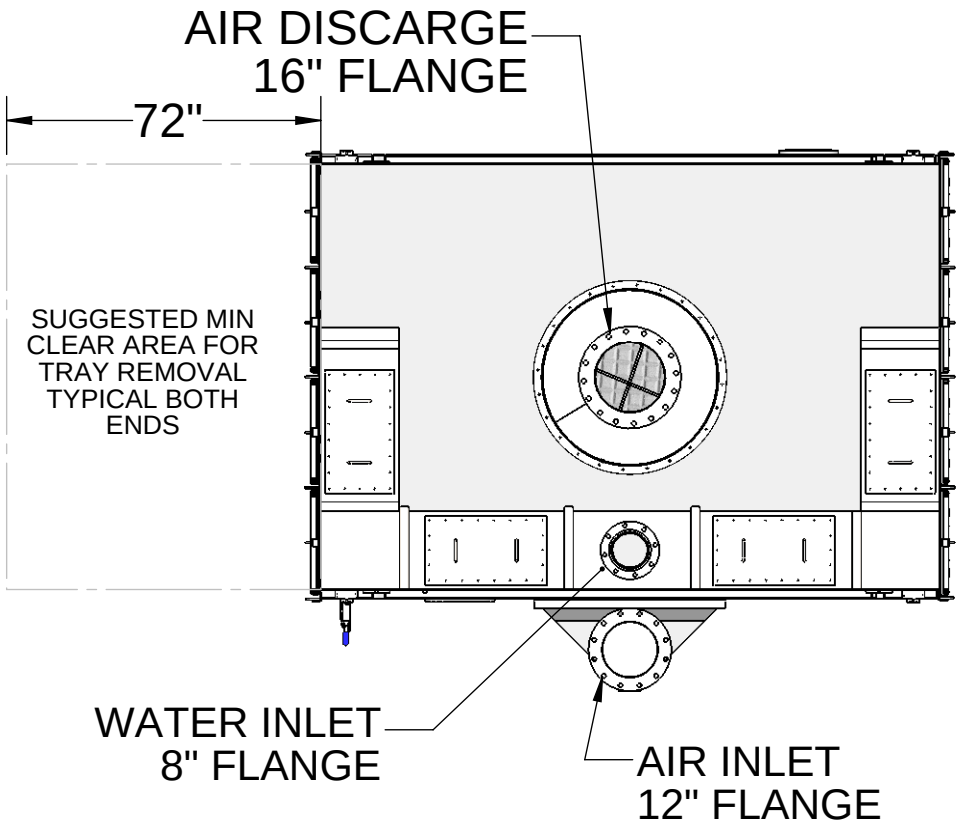

PLAN VIEW

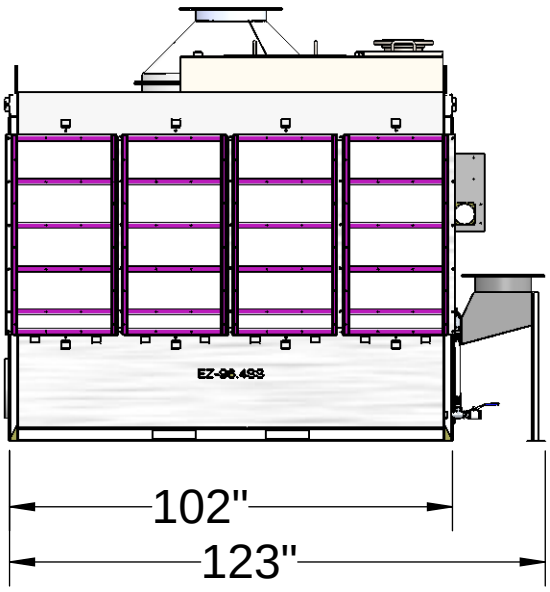

FRONT VIEW

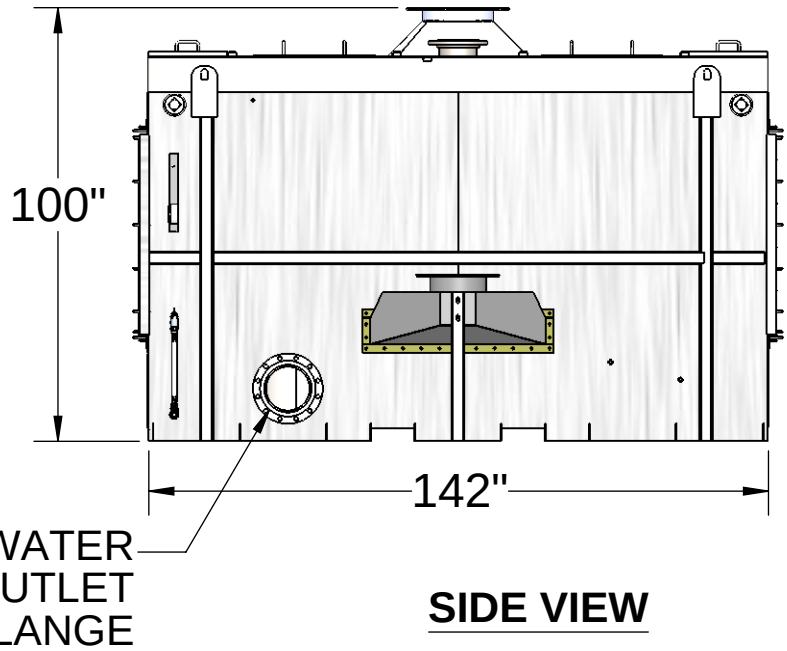

SIDE VIEW

EZ-96.4SS (AIR STRIPPER ONLY)

FOR MORE SPECIFICATIONS CLICK ON:

http://www.qedenv.com/Products/Airstrippers_VOC_Removal/Air_Stripper_Specifications/

NOT TO SCALE

NOT FOR CONSTRUCTION, FOR REFERENCE ONLY

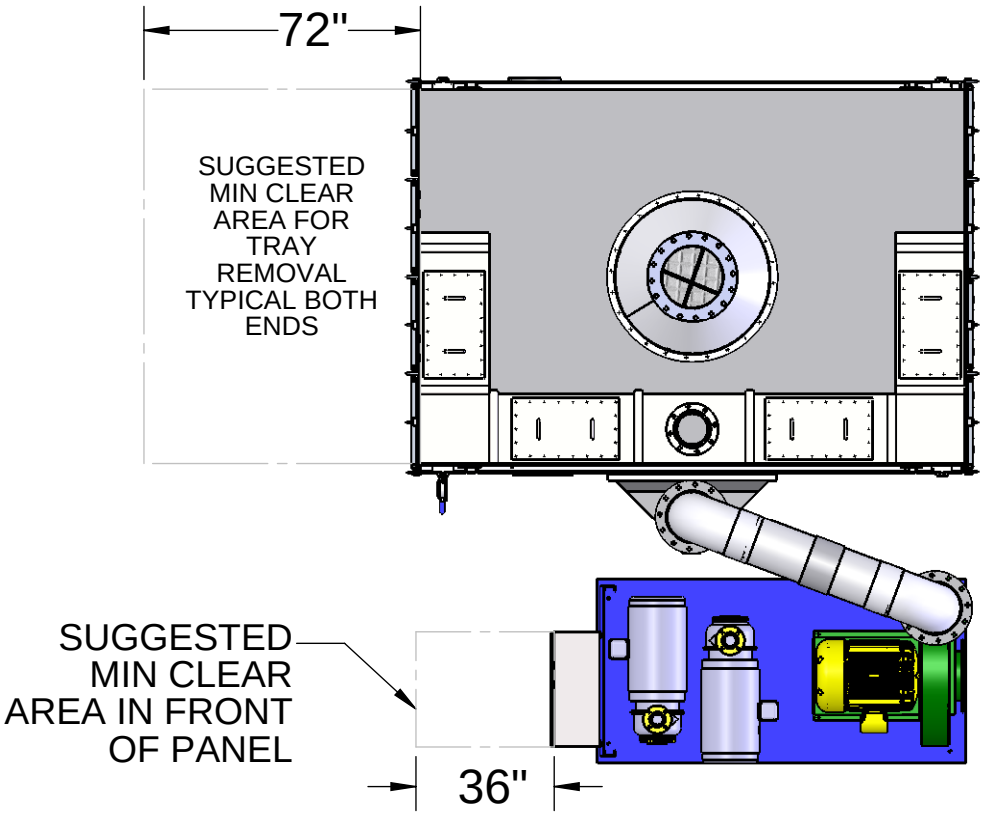

PLAN VIEW

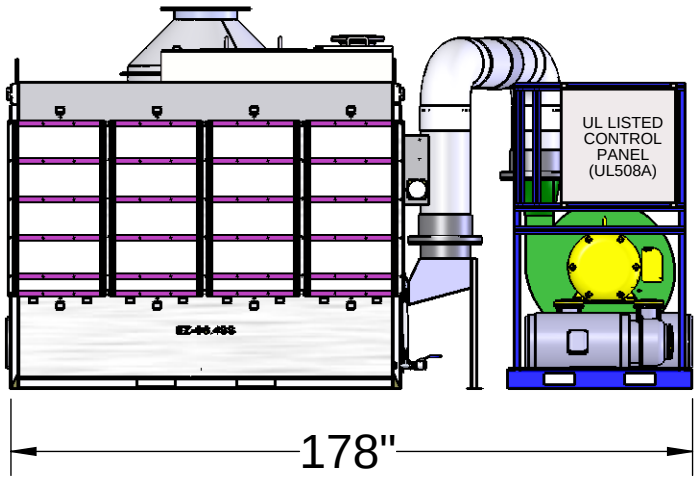

FRONT VIEW

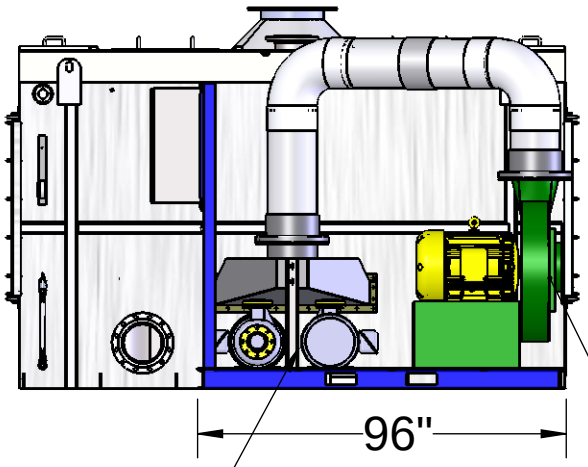

SIDE VIEW

AERATION BLOWER

WATER INLET AND DISCHARGE PUMPS (TYPICALY 2" NPT CONNECTIONS)

EZ-96.4SS

EXAMPLE OF A SKID SYSTEM WITH CONTROL PANEL, PUMPS, AND BLOWER
CONTACT QED FOR INFORMATION ON ALL OPTIONS.
NOT TO SCALE

NOT FOR CONSTRUCTION, FOR REFERENCE ONLY